# eCP80 - 48V Electric Water Pump

Turntide's eCP80 48V is an electrically powered centrifugal pump, configured for use with a 48V DC power supply using CAN bus communication. Supplied with cast aluminium housings, the pump is suitable for a wide range of on and off-road applications.



## Features

- Pump family tested against ISO16750 Environmental test standards
- Integrated motor controller provides variable speed control
- CAN communication (SAE J1939 compatible)
- Electrical connector / coolant outlet orientation options available
- Fault reporting
- Compliant to ECE R10
- Sealless

## Applications



**TURNTIDE TECHNOLOGIES**

*Turntide Technologies designs and manufactures breakthrough electric motors, power electronics and energy storage solutions that optimize performance, reliability, and efficiency in all things that move.*

Turntide Technologies, Eighth Avenue, Team Valley Trading Estate, Gateshead, NE11 0QA, UK

turntide.com | electrificationsales@turntide.com

Details are correct at time of publishing

TTN-MAN-012
V3.0 – 17/12/2024

# Specification

| Key Features | |
|---|---|
| **Pump Type** | Sealless Centrifugal Impeller |
| **Best Efficiency Point (BEP)** | 77LPM @ 1.8bar static pressure rise |
| **Housing Material** | Cast Aluminium LM6 |
| **Fluid Connection** | 1" Hose Barb |
| **Rated Voltage (V)** | 36 – 52 |
| **Max Current (A) †** | 11 |
| **Max Input DC Power (W) †** | 510 |

*† Measured at 48V*

| Environmental | | | |
|---|---|---|---|
| **IP Rating** | • IP6k9k | **Operating Temperature ††** | • -30°C to +75°C |
| | | **Storage Temperature ††** | • -40°C to +85°C |

*†† Product family tested to ISO16750-4 for operating and storage temps*

| IO | | | |
|---|---|---|---|
| **Control†††** | • CAN (SAE J1939 compatible) | **Connector** | • Deutsch ICT (TE Connectivity)<br>• DT-15-08PA |

*††† For limited functionality*

| Safety and Compliance | |
|---|---|
| **EMC** | • ECE Reg10 |

| Mass, Dimensions and Drawings | |
|---|---|
| **Mass (kg)** | 2.82 |
| **Length (mm)** | 192.3 |
| **Width (mm)** | 100 |
| **Height (mm)** | 159.3 |

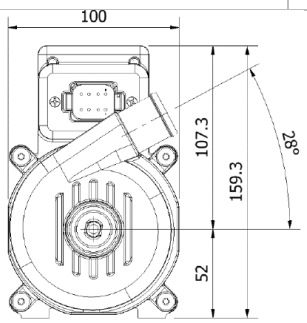


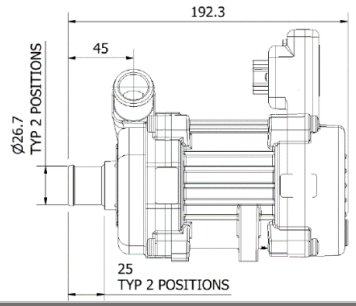


## Additional Information

### Hydraulic

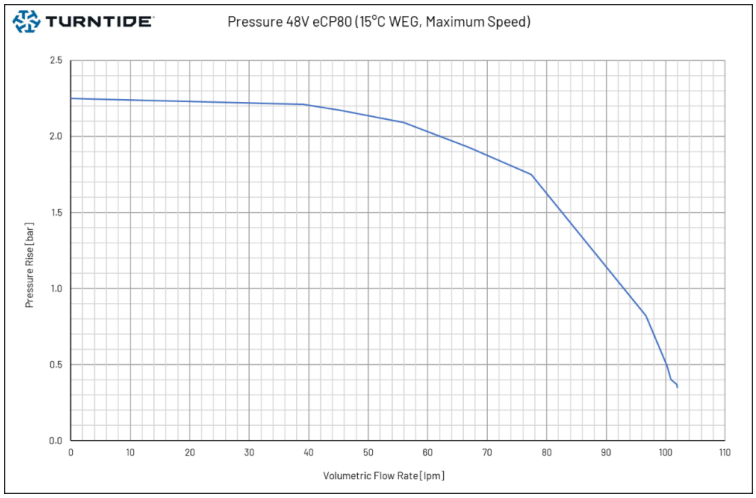


For more information on this product or Turntide's range of inverters, motors, batteries, pumps and fans, please visit our web-site or contact our team of experts at electrificationsales@turntide.com.