Turntide™ Smart Motor System: V01 (1, 1.5, 2, 3 HP)

The Turntide Smart Motor System delivers unprecedented energy efficiency in a highly reliable switched reluctance design. This software-driven motor solution includes a Smart Motor and Motor Controller, complete with networking and connection capabilities to Turntide Cloud™. The patented Turntide Motor System is proven to significantly reduce energy consumption, dramatically reducing energy costs and carbon footprint resulting from electric motor operation.

The V01 motor is suitable for a range of new and retrofit HVAC, refrigeration, and pumping applications in both fixed and variable speed.

Turntide Smart Motor System

FEATURES	SMART MOTOR SYSTEM BENEFITS
Turntide Cascade© - PC graphic-based programming tool, part of the Turntide Controls Platform	Provides for customization to assure your motor control sequences can be accomplished for every application.
Configurable sequence of operation based on internal and external sensor feedback using up to 16 integrated I/O points	Reduces hardware needed to control HVAC and other equipment, reducing overall cost of system implementation.
"Fail Safe" mode	Keeps the Smart Motor running during phase loss, ensuring continuous operation and minimum downtime.
Turntide Cloud	Provides monitoring and remote reporting, enabling extended data logging and alerts and alarms based on selectable parameters, protecting equipment and assuring the most efficient operation.
Built-in soft start and brownout protection	Eliminates nuisance service calls and interruptions to building operation due to inadvertent circuit breaker trips, reducing maintenance costs.

C ETL LISTED US
Intertek

Certified to CSA STD C22.2#77, CSA C22.2#100, CSA C22.2#274, & CSA E60730-1 and conforms to UL STD 1004.7, UL 508C, UL 60730-1, UL 1004-7, & UL 1004-8

System Efficiency vs Torque at Various Speeds

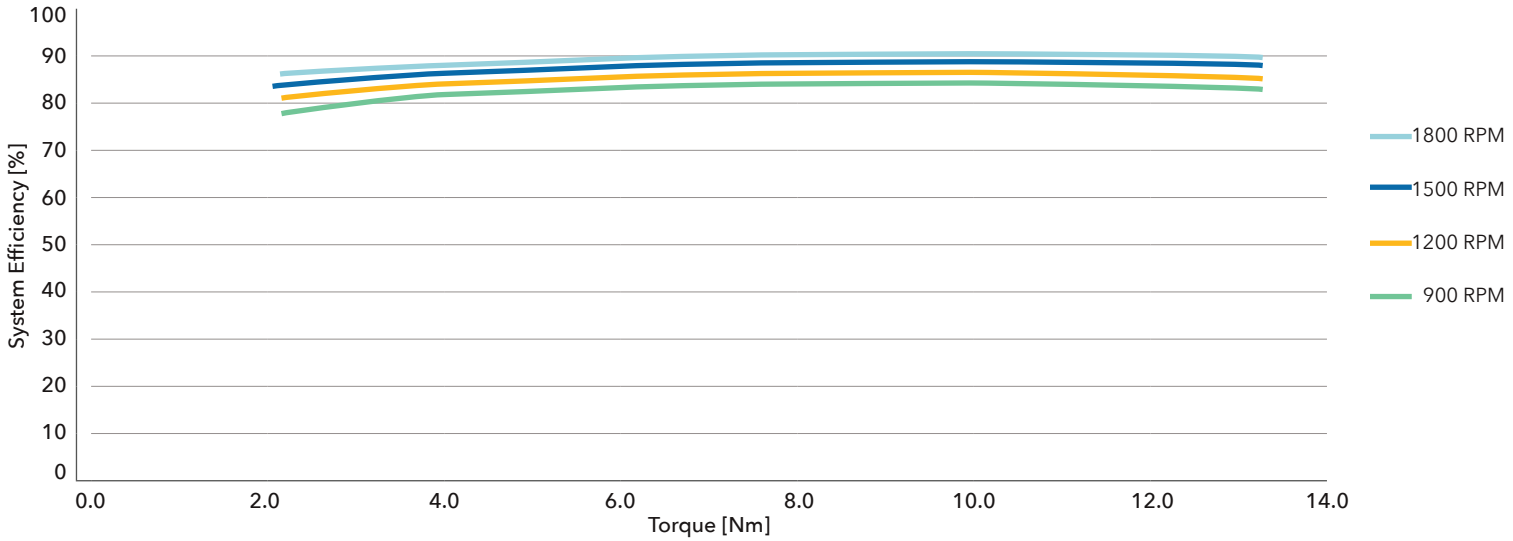

Torque-Speed Curve

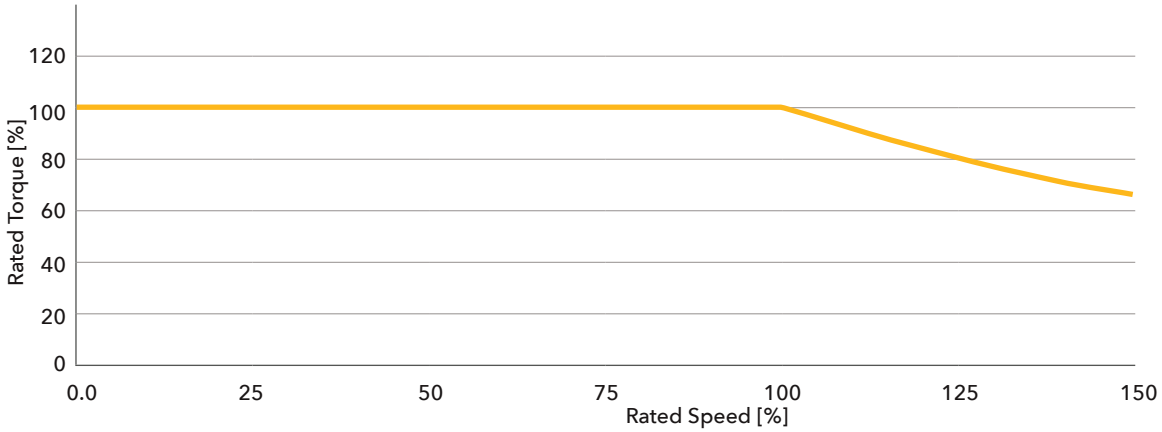

Motor System Characteristics

Rated HP	1, 1.5, 2, 3 HP	Motor Enclosure	TEFC
Rated RPM	1800 RPM	Duty Rating	Continuous
Operating RPM	100-3600 RPM	Rated Service Factor	1.15
Supply Voltage	208-230VAC, 460VAC	Motor to Controller Power Wire	14 AWG
Supply Phase	Single (1HP) or Three-Phase (1-3HP)	Insulation Class	F
Supply Frequency	60 Hz	Ambient Temperature Range	-10°C to +40°C
Peak System Efficiency	91%	Relative Humidity	95%, non-condensing
Power Factor over Operating Range	0.65-0.80	Rotor Inertia	0.100 lb-ft^2
Motor Frame Sizes	56, 143T/145T	Motor Weight	54 lb

Motor Dimensions

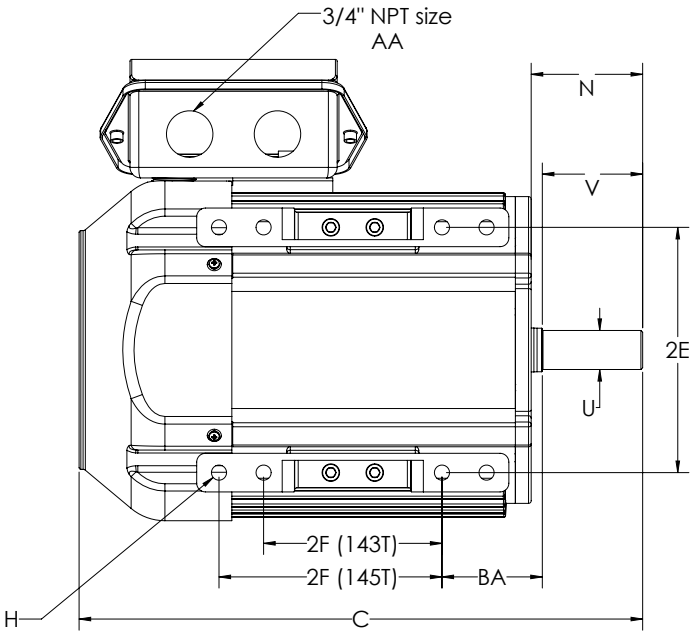

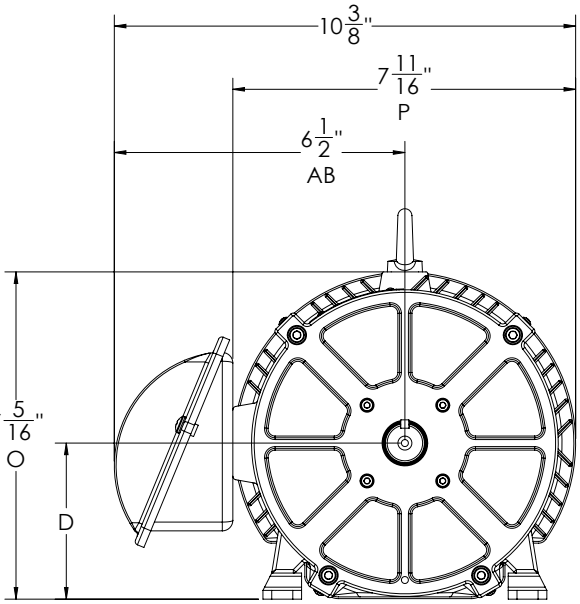

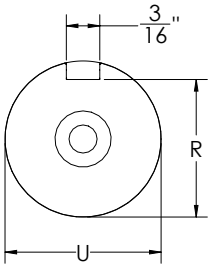

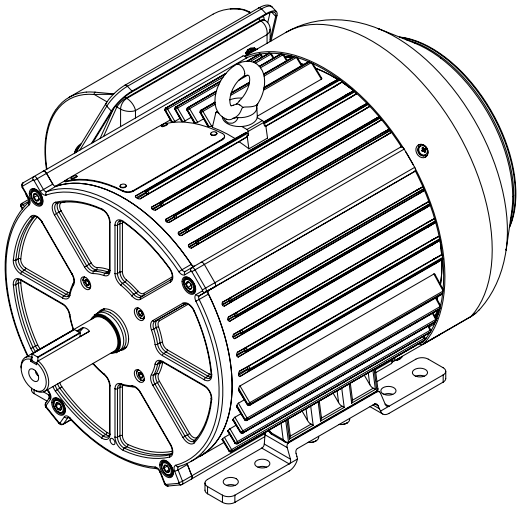

Dimension Table (in inches)

NEMA	D	E	2F	H	BA	U	V	C
56	3 ½	2 7⁄16	3	11/32 SLOT	2 ¾	5⁄8	1 7⁄8 or 4 ½	12 5⁄8
143T	3 ½	2 ¾	4	11/32	2 ¼	7⁄8	2 ¼	12 5⁄8
145T	3 ½	2 ¾	5	11/32	2 ¼	7⁄8	2 ¼	12 5⁄8

Definitions:

D - height of shaft
E - 1/2 distance between foot holes side-to-side
2F - distance between foot holes front to back
H - foot hole size
BA - distance from front foot hole to back of shaft horizontally
U - shaft diameter
V - shaft length
C - overall length

Motor Controller Name Plate

SMC™
SOFTWARE MOTOR COMPANY

MODEL	SMC-P04
MOTOR	SMC-V01
INPUT	3PH 208/230VAC 60Hz / 3.2A - 9.8A 3PH 460VAC 60Hz / 3.8A - 5.7A
OUTPUT	3PH 280-680VDC MAX HP 3.0

SMC Motor Controller
HR-SRM Motors
www.softwaremotor.com

Made in China

Conforms to UL STD 508C
Certified to CSA STD C22.2#274

WARNING: This SMC Motor Controller will only operate stated SMC Smart Motor.

AVERTISSEMENT: Ce contrôleur de moteur SMC doit etre utilisé qu'avec moteur de la série de intelligent SMC.

LISTED
Intertek
5003619

Motor Controller I/O

QTY	Description
7	Programmable digital inputs
1	Programmable voltage output: 0-10, 20mA limit
4	Relay outputs: 1A, 125VAC limit
4	Universal inputs, individually selectable as: • Voltage Mode: 0-10V • Current Mode: 0-20mA; or 4-20mA • Resistive Mode • External Logic Mode

Motor Controller Dimensions

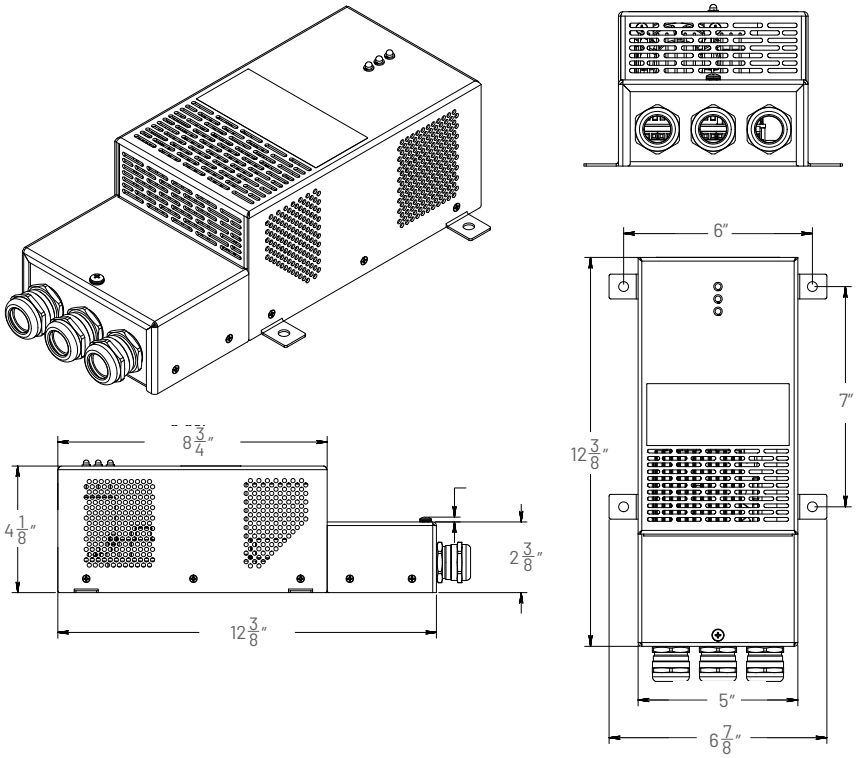

Turntide Motor Controller

The Turntide Motor Controller controls all operations of the Turntide Smart Motor and is required for motor operation. Its internal program assures that the motor is operating at the highest efficiency at any speed in any application. It does this by monitoring the internal sensors and feedback from the Smart Motor and adjusting control signals for optimization. The Motor Controller provides physical connection for 13 sensors and relay output connections for control and monitoring of associated equipment such as RTUs, AHUs and pumps. The Motor Controller can be configured with Cascade software to operate under an infinite number of control scenarios. When connected with the Turntide supervisor, remote configuration, updates, alerts, alarms, and system data logging can be delivered through Turntide Cloud or a BMS system.

Indemnity

The information in this document is subject to change without notice and should not be construed as a commitment by Turntide Technologies or Software Motor Company. Turntide Technologies assumes no responsibility for any errors that may appear in this document. In no event shall Turntide Technologies be liable for incidental or consequential damages arising from use of this document or the software and hardware described in this document.

TURNTIDE

1295 Forgewood Avenue, Sunnyvale, CA 94089
sales@turntide.com

Turntide Technologies (formerly Software Motor Company) has developed the world's most efficient and intelligent electric motor system. The revolutionary Smart Motor System is based on proven switched reluctance technology, now managed with advanced cloud software and connected to precise controls via IoT. Turntide's vision is to eliminate the 25% of global electricity consumption that is wasted by legacy motors, thus accelerating the world's transition from fossil fuels. Turntide is based in Sunnyvale, Calif., with offices in San Francisco; Arlington, Wash.; and Kennesaw, Ga. Turntide has installed Smart Motor Systems with dozens of customers, reducing their motor electricity consumption by an average of 64%, and is powering the systems of leading OEMs. For further information, visit www.turntide.com.

POWER IS VALUABLE. USE IT INTELLIGENTLY.

© Turntide Technologies. All rights reserved. DOTC00019-11