TURNTIDE FOR BUILDINGS

Hub 7
Automation Install Guide

© Turntide Technologies. Confidential. All Rights Reserved.

TABLE OF CONTENTS

Contents

1. Product Overview **3**
1.1. Turntide Hub 7 3
1.1.1. Dimensions 3
1.1.2. Left View 3
1.1.3. Right View 4
1.2. Turntide VRF Adapter 5
1.2.1 Dimensions 5
1.3. Turntide Enclosure 5
1.3.1. Parts List 5
1.3.2. Enclosure Drawings 6
2. Installation Requirements **7**
2.1. Location Requirements 7
2.2. Environmental Conditions 7
3. Installation Instructions **7**
3.1. Mounting the Turntide Enclosure 7
3.2. Installation - Hub Only 7
3.3. Connecting Power 8
3.3.1. Power Requirements 8
3.3.2. Powering with Turntide Enclosure 8
3.3.3. Powering Hub Only 9
3.4. Connecting Internet 9
3.4.1. Internet Connectivity 10
3.4.2. Connecting Ethernet with Enclosure 10
3.4.3. Connecting Ethernet Hub only 10
3.4.4. Using a Cell Modem 10
4. Connecting Equipment **11**
4.1. IP Network 11
4.1.1. What Can Be Connected 11
4.1.2. How to Connect 11
4.1.2.3. Hub 7 11
4.1.3. Limitations / Cable Specifications 11
4.2. RS-485 Network 11
4.2.1. What Can Be Connected 11
4.2.2. Wiring 12
4.2.3. How to Terminate 12
4.2.3.1. Turntide Hub 7 12
4.2.4. Limitations / Cable Specifications 13
4.3. USB Network 13
4.3.1. What Can Be Connected 13
4.3.2. How to Connect 13

© Turntide Technologies. Confidential. All Rights Reserved.

4.3.3. Limitations / Cable Specifications 13
5. Installing Turntide VRF Adapter 13
5.1. Connecting Power 13
5.2. Network Configuration & Connecting to the Hub 14
5.2.1 Network & Cable Limitations 14
6. Initial Configuration (Quick Start Guide) 14
6.1. Connecting to the Hub Locally 14
6.2. Logging In 15
6.3. Initial Configuration / IP Setup 15
6.4. Confirming Cloud Connection 16
7. Turntide Stratup Troubleshooting Guide 17
7.1 IP Network Issues 17
7.2 VRV Discovery Issues 20
7.3 BACnet Discovery Issues 21

© Turntide Technologies. Confidential. All Rights Reserved.

1. Product Overview

1.1. Turntide Hub 7

1.1.1. Dimensions

Dimensions in mm

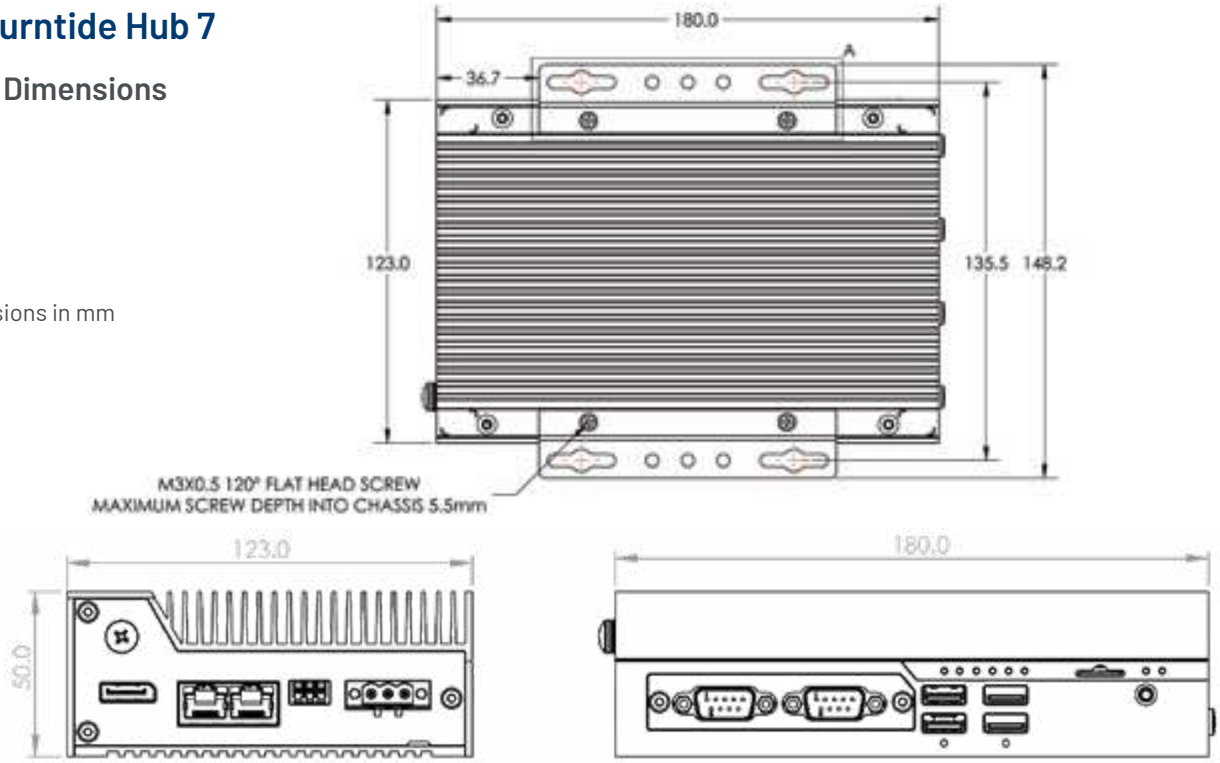

1.1.2. Left View

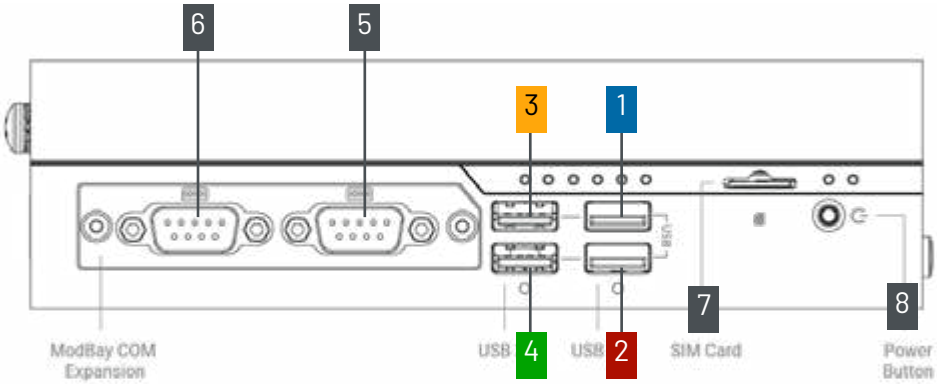

#	Label	Description
1	USB 1 (blue)	
2	USB 2 (red)	
3	USB 3 (yellow)	
4	USB 4 (green)	
5	COM 1 RS-232/422/485	Connects to an RS-485 network. Requires an RS232/RS485 converter
6	COM 2 RS-232/422/485	Connects to an RS-485 network. Requires an RS232/RS485 converter
7	MicroSIM	For SIM Cards
8	Power Button	Used to power on/off the hub

Connecting Pins for COM 1 and COM 2

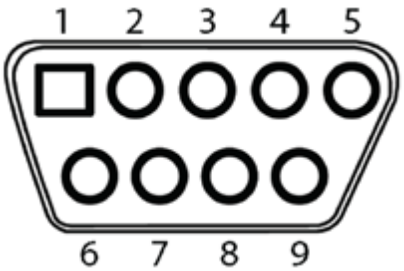

D-SUB Conn. 9P 90D(M) DIP

PIN	RS232	RS422	RS485
1	DCD	TX-	TX-/RX-
2	RX	TX+	TX+/RX+
3	TX	RX+	NC
4	NC	RX-	NC
5	GND	NC	NC
6	NC	NC	NC
7	RTS	NC	NC
8	CTS	NC	NC
9	RI/PWR	NC/PWR	NC/PWR

© Turntide Technologies. Confidential. All Rights Reserved.

1.1.3. Right View

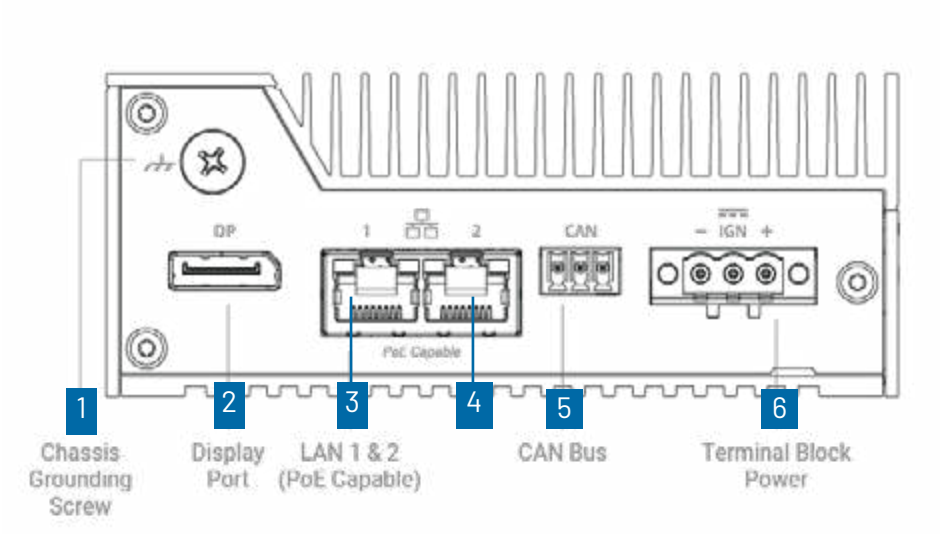

#	Label	Description
1	Chassis Grounding Screw	Common system, grounding point
2	Display Port	For troubleshooting purposes only
3	IP1	Connect an Ethernet (RJ45) cable to gain network access.
4	IP2	Connect an Ethernet (RJ45) cable to gain network access.
5	CAN Bus*	Serial communication bus standard that allows microcontrollers and devices to communicate with each other. *CAN Bus is not supported at this time.
6	Terminal Block Power	Connect a 10-30 VDC power connector to provide power to your system

© Turntide Technologies. Confidential. All Rights Reserved.

1.2. Turntide VRF Adapter

The Turntide VRF adapter is used to connect VRF systems directly to the Turntide Hub for monitoring and control.

1.2.1 Dimensions

4.13" x 3.54" x 1.00"

1.3. Turntide Enclosure

The prefabricated Turntide Enclosure is designed to safely hold Turntide equipment and accessories for easy installation and networking. It is recommended the panels are used for all jobs.

1.3.1. Parts List

NEMA Type 1 / IP 30 Enclosure
5-Port 10/100Mbps Switch
7-Port USB Hub
24VDC DIN Rail Power Supply
DIN Rail Mount AC Receptacle
DIN Rail 120VAC circuit breaker

© Turntide Technologies. Confidential. All Rights Reserved.

1.3.2. Enclosure Drawings

Note: Cradlepoint Cell router (if being used) should be mounted externally of the panel in a location with good cell service.

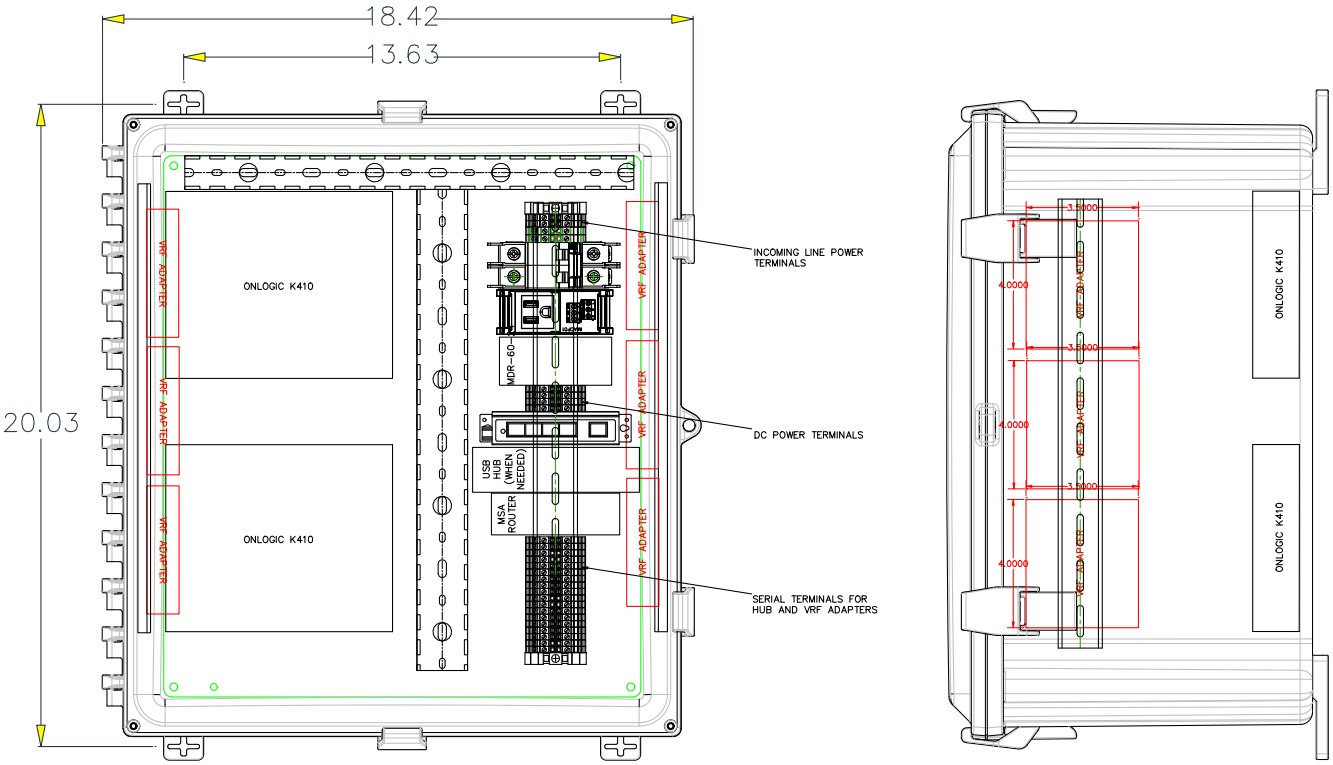

LARGE ENCLOSURE

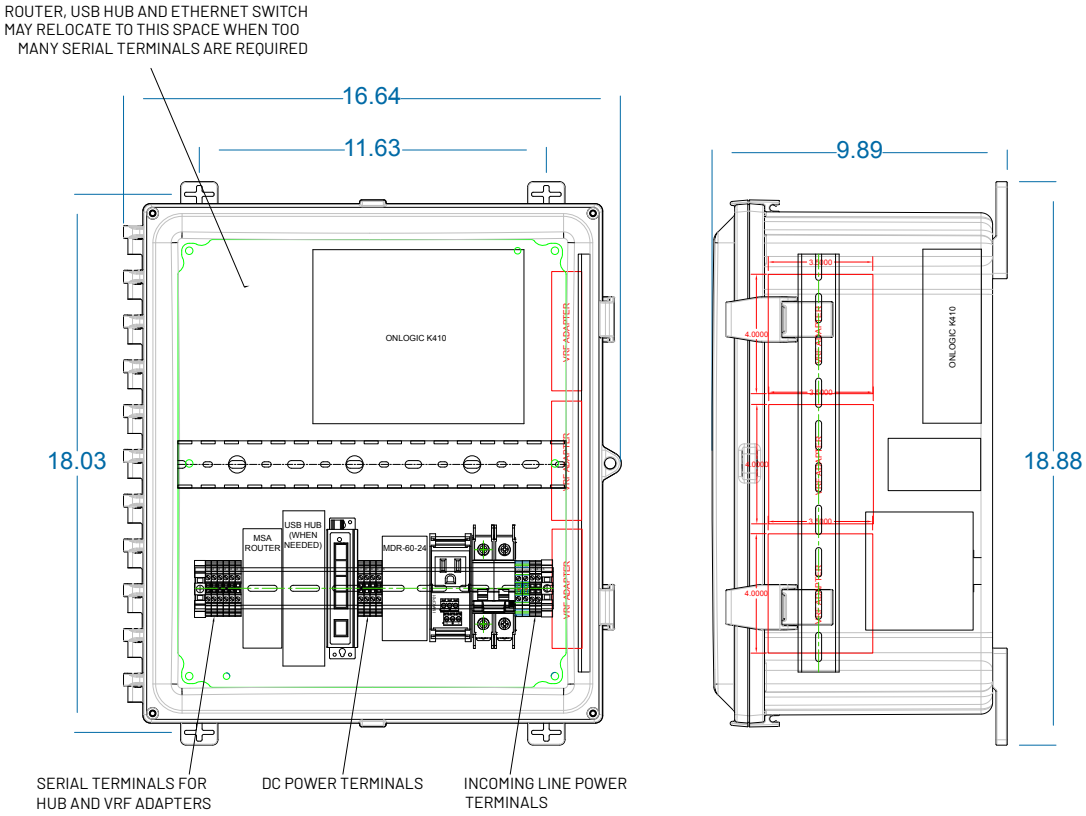

SMALL ENCLOSURE

© Turntide Technologies. Confidential. All Rights Reserved.

2. Installation Requirements

It is recommended that the Turntide Hub is always installed inside of a Turntide Enclosure or similar. Be sure to install the Turntide Hub in a location that meets the requirements in 2.1 and 2.2 below.

2.1. Location Requirements

The Turntide Hub must be mounted in a clean, indoor area that is free from dust, water and direct sunlight. If not mounted in a panel, the Hub should be in an environmentally maintained communications room.

2.2. Environmental Conditions

Maximum Vibration	5 Hz with 0.0002 G2/HZ
Altitude	-15.20 m to 5,000 m (-50 ft to 16,404 ft)
Temperature	-30 C to 70 C (-22 F to 158 F)
Humidity	10% to 90% (non-condensing) @ 40C

3. Installation Instructions

3.1. Mounting the Turntide Enclosure

The Turntide Enclosure is easily mounted on the wall using the four pre-drilled mounting holes located on the back of the enclosure.

Note: For proper installation all four mounting points must be used

Note: Make sure all four mounting points are properly attached to the wall using correctly rated wall anchors or expansion anchors.

Warning: Please insure the wall mounting locations are rated to hold the entire enclosure.

3.2. Installation - Hub Only

Turntide 7 Hubs purchased without an enclosure can be mounted using the included wall mount.

© Turntide Technologies. Confidential. All Rights Reserved.

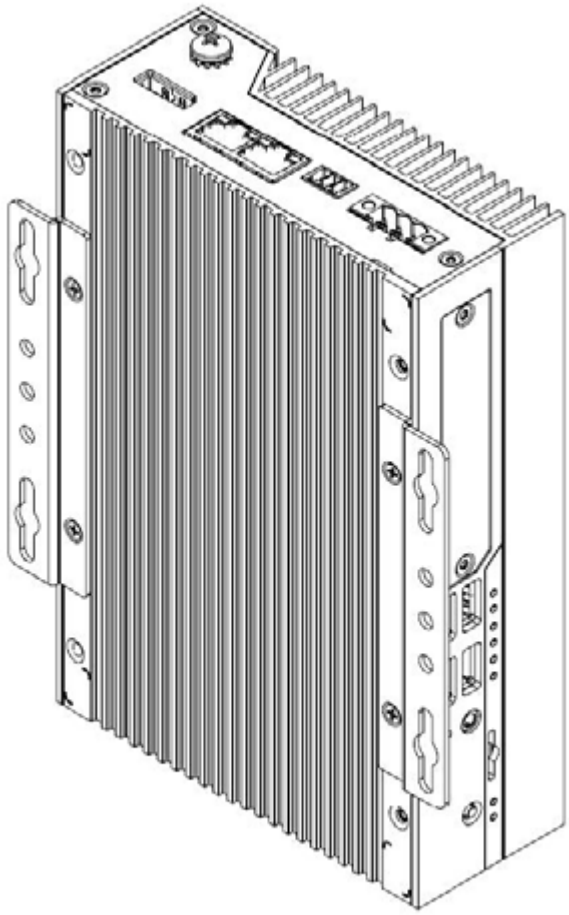

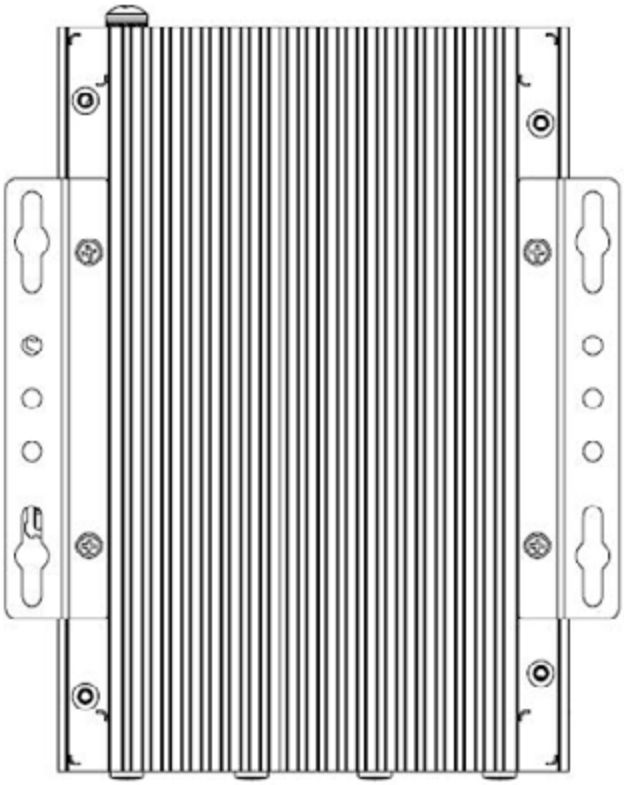

3.3. Connecting Power

3.3.1. Power Requirements

Warning: Electrical work is dangerous and should only be completed by a skilled and qualified person. All electrical procedures must be carried out with the power supply shut off. Do not turn the power supply on until all connections are made. Not doing so may result in electric shock.

3.3.2. Powering with Turntide Enclosure

The Turntide Enclosure is shipped with all required equipment power supplies and wiring completed. A 120VAC power feed is required to be wired into the supplied breaker.

© Turntide Technologies. Confidential. All Rights Reserved.

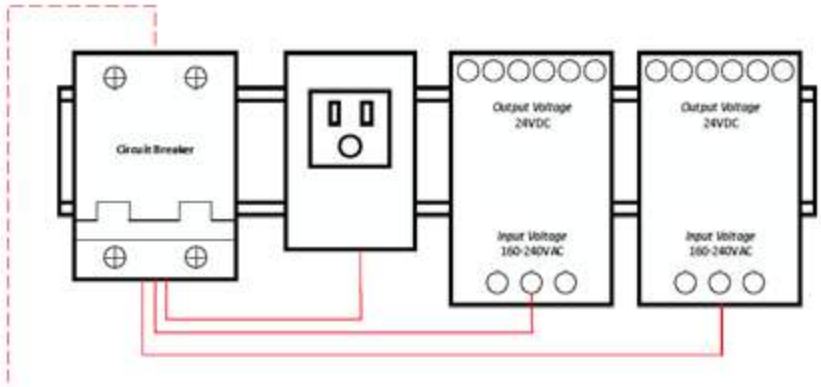

3.3.3. Powering Hub Only

12 VDC - 57 VDC

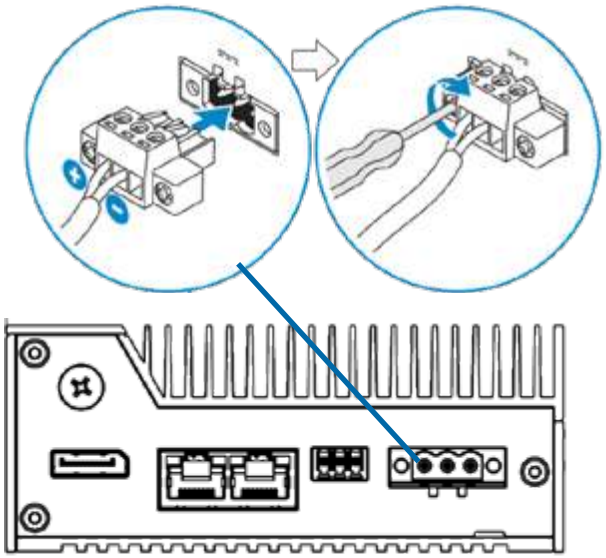

3.4. Connecting Internet

The Turntide Hub requires an active internet connection to connect to the Turntide Cloud. An ethernet connection to an active internet line is required at the installation location to be connected to the Turntide Hub. When using a local LAN connection the below port configurations are required to be completed by the Network Administrator.

List of Ports to be Opened by IT

	Destination	Protocol	Port
Required Egress	Turntide Cloud	MQTT	TCP/8883
Required Egress	Turntide Cloud	SST	TCP/3199
Required Egress	Turntide Cloud	HTTPS	TCP/443

© Turntide Technologies. Confidential. All Rights Reserved.

Required Egress	Configurable	DNS	UDP/53
Required Egress	Configurable	NTP	UDP/123
Important Egress	Protocol Specific	HTTP	TCP/80

3.4.1. Internet Connectivity

The Turntide Hub requires a stable internet connection to connect to the Turntide Cloud. Depending on the planned internet connection the below is required at the installation location.

Local Area Network: Ethernet cable connected to the building network

Cellular Network: Strong 4g cellular network signal

When connecting via local area network, the below port requirments must be configured for proper communication with the Turntide Cloud Application. Refer to the table in 3.4 above, "List of Ports to be Opened by IT."

3.4.2. Connecting Ethernet with Enclosure

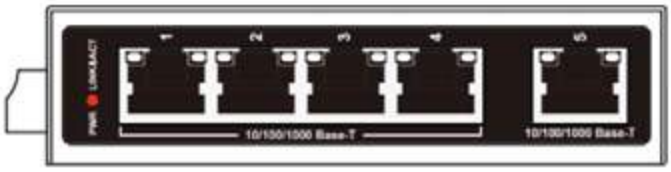

The Turntide Enclosure ships with a pre configured 5-port data switch. Connect an ethernet cable (RJ45 plug) into any available port on the supplied switch.

3.4.3. Connecting Ethernet Hub only

When not using a Turntide Enclosure or switch an ethernet cable must be connected directly to the hub.

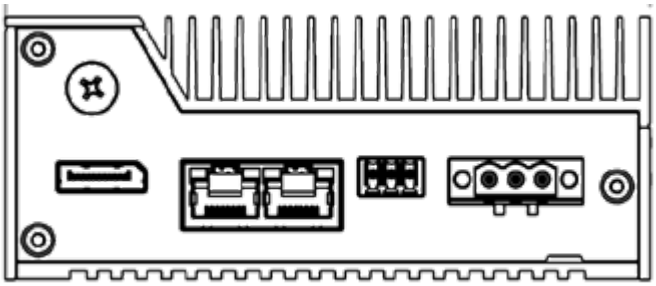

Turntide Hub 7

The Turntide Hub 7 has two ethernet ports, LAN 1 and Lan 2. LAN 1 is the primary connector: connect the ethernet cable (RJ45) to LAN 1.

3.4.4. Using a Cell Modem

When using a supplied cellular modem an ethernet cable must connect the cell modem to the Turntide hub using one of the methods outlined in 3.3.1 and 3.3.2.

© Turntide Technologies. Confidential. All Rights Reserved.

4. Connecting Equipment

This section outlines how to connect compatible building equipment to the Turntide Hub. There are several methods of connection available.

4.1. IP Network

4.1.1. What Can Be Connected

Turntide supports multiple protocols over ethernet. Any devices supporting these protocols can be connected over IP to the Turntide hub.

Supported IP Protocol

BACnet IP	Modbus TCP	NOAA Weather
Open ADR	Generic REST	

4.1.2. How to Connect

4.1.2.3. Hub 7

Turntide Hub 7 has two ethernet ports. Networked IP devices should be connected to the appropriate ethernet port to match the hub's configuration. By default LAN A port is used. If multiple IP devices are to be connected a network switch is required. Use of the LAN B Port is also allowed.

The Turntide enclosure ships with a preconfigured 5 port switch for IP connections. By default, LAN A is configured for a static IP address of 192.168.1.100 and LAN B is configured for DHCP. Either can be used to connect to the Hub 7.

4.1.3. Limitations / Cable Specifications

Allowed cable types	Ethernet Cat 5e, Cat 6, Cat 6a, Cat 7 or Cat 7a
Termination type	RJ45
Maximum cable length	100 m (328 ft)

4.2. RS-485 Network

4.2.1. What Can Be Connected

The Turntide hubs have multiple RS-485 network ports that can be used to connect building devices. Each RS-485 network can only be used for a single protocol at a time.

Supported Protocols

- Trane Comm4
- BACnet MSTP
- BACnet IP
- NOAA Weather
- Modbus TCP
- Modbus RTU
- OpenADR
- Generic REST

© Turntide Technologies. Confidential. All Rights Reserved.

4.2.2. Wiring

RS-485 networks must be run as a daisy chain between equipment. Star and Spoke connections are not allowed and can cause network communication issues.

The Turntide hub can be positioned at any point along the network though it is highly recommended the hub be placed at the physical end of line for best network performance.

Note: The shield wire must be connected along the daisy chain for proper functionality. A single common cable type must be used along the entire network. Splicing of different cable types can lead to network faults. This external device is NOT a Surge Protection device. We only support RS-485 mode

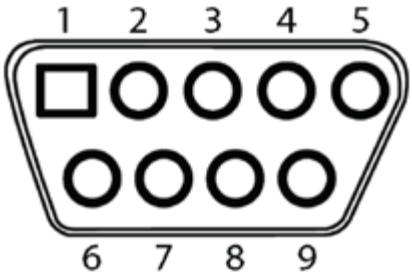

D-SUB Conn. 9P 90D(M) DIP

PIN	RS485
1	**TX-/RX-**
2	**TX+/RX+**
3	NC
4	NC
5	NC
6	NC
7	NC
8	NC
9	NC/PWR

4.2.3. How to Terminate

When using RS-485 ensure all terminations are secure with no crossed wires.
Note: The RS-485 cable's shield should be connected to earth ground at one end only

4.2.3.1. Turntide Hub 7

There are no bias or termination switches on Turntide Hub 7.

© Turntide Technologies. Confidential. All Rights Reserved.

4.2.4. Limitations / Cable Specifications

Allowed cable types	Twisted pair(1 or 2) shielded cable with braid and foil
Cable size	24 - 22 AWG
Termination type	Daisy Chain
Maximum cable length	1200 m (4000 ft)
Maximum devices	Electrical load and protocol dependent

4.3. USB Network

4.3.1. What Can Be Connected

The USB ports on the Turntide Hubs can be used to connect Turntide VRF Adapters and USB adapters.

4.3.2. How to Connect

USB devices can be plugged directly into the available USB ports on the optional 7 port USB Hub expander.

When using the Turntide enclosure, the HUB 7 can support up to 4 USB devices. IF additional USB devices are needed they should be plugged into the optional 7 port USB Hub available from Turntide.

Note: The Turntide HUB only recognizes known USB devices like the VRF adapter on a HUB power cycle or HUB software restart. If VRF adapter USB cabling has been altered, either directly at the HUB USB port(s) or at the ports of a connected USB expander, then the HUB software must be restarted or the HUB power cycled to recognize the VRF adapter's current connection

4.3.3. Limitations / Cable Specifications

Allowed cable types	USB
Maximum cable length	5 m (16 ft)
Maximum devices	1 per a USB port

5. Installing Turntide VRF Adapter

5.1. Connecting Power

The Turntide VRF Adapter is powered over USB. It does not require external power. Do not connect 24 VDC power to the Turntide VRF Adapter unless instructed to by Turntide support.

© Turntide Technologies. Confidential. All Rights Reserved.

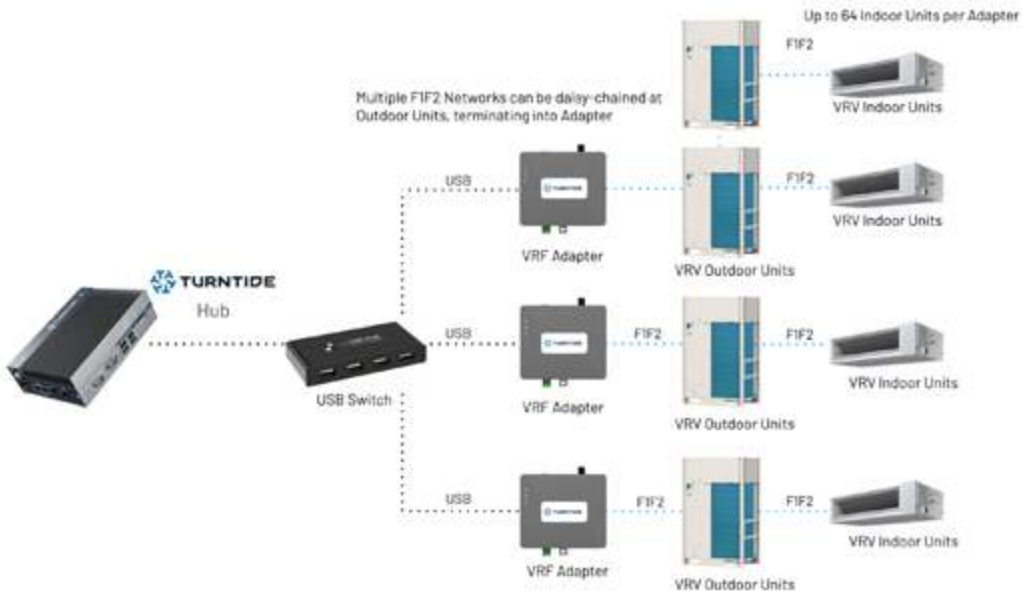

5.2. Network Configuration & Connecting to the Hub

Connect the F1F2 bus directly to the D-Net terminal connection on the VRF Adapter. The VRF adapter connects to the Turntide Hub using a USB A-B cable. Up to 4 Turntide VRF Adapters can be connected to a single hub. Customer's can increase the number of VRF adapters per HUB 7 to a total of 7 using the 7 port USB Hub expander option available from Turntide.

Note: a single F1F2 network can be connected to the VRF adapter.

5.2.1 Network & Cable Limitations

Allowed cable types	Stranded, Non-shielded, Two Conductor
Cable size	18 - 16 AWG
Termination type	Daisy Chain
Maximum cable length	Outdoor unit - indoor unit: <= 3280 ft (total wiring length: 6560 ft)
Maximum FCUs (per network)	64

We recommend customers follow Daiking wiring guidelines when wiring Dnet devices to the Turntide VRF adapter

6. Initial Configuration (Quick Start Guide)

6.1. Connecting to the Hub Locally

With the hub mounted, power the panel/hub.

Verify LED power lights are illuminated on the Turntide Hub

© Turntide Technologies. Confidential. All Rights Reserved.

Connect an ethernet cable from a PC or laptop to a free port on the ethernet switch.

Configure the computer's IP address as follows:

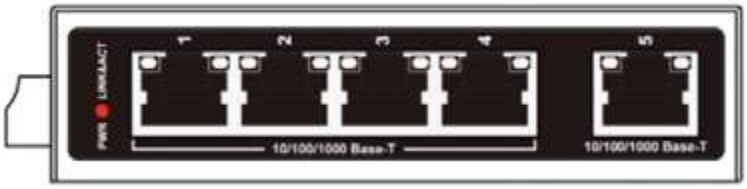

- IP address: 192.168.1.101
- Subnet Mask: 255.255.255.0
- Router/Default Gateway: 192.168.1.1

6.2. Logging In

Using a web browser on the computer, log into the Turntide Hub (https://192.168.1.100:5000) with the default admin credentials.

If prompted to accept the security certificate select Advanced > Go to Website

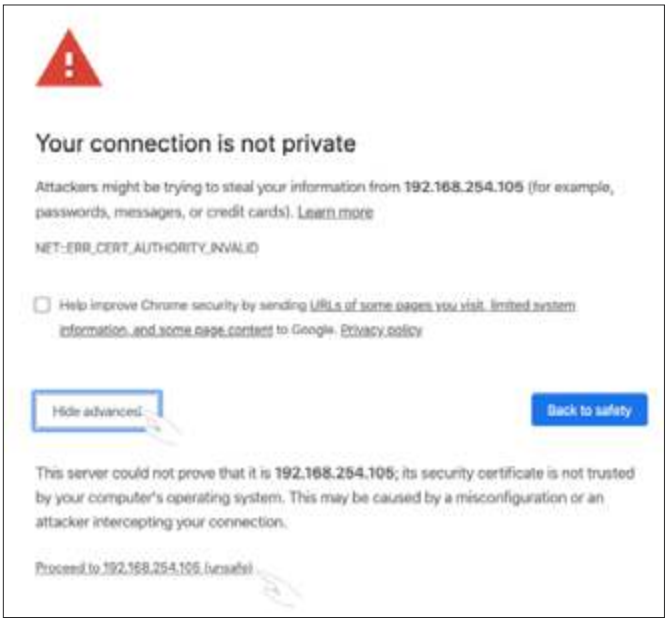

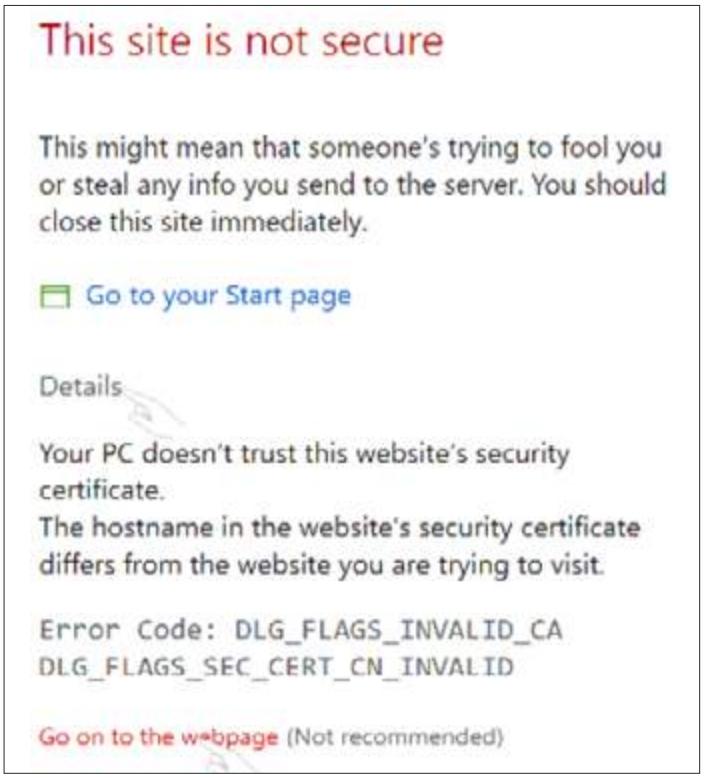

6.3. Initial Configuration / IP Setup

1. Select System > Network from the navigation bar

© Turntide Technologies. Confidential. All Rights Reserved.

2. Select IP interface (IP1 primary interface)

3. Disable DHCP and configure the fields with the assigned IP address

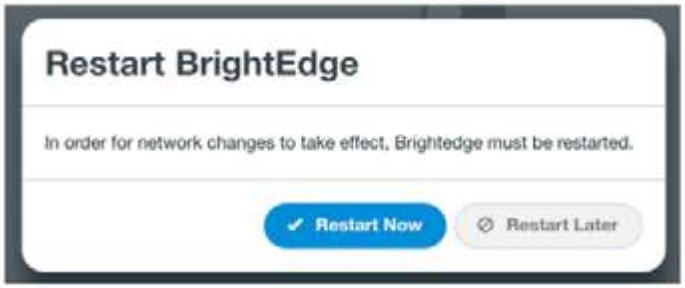

4. Select Save and Restart Now to complete the setup

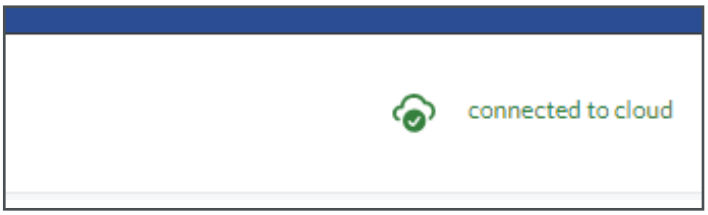

6.4. Confirming Cloud Connection

While still directly connected to the Turntide Hub, use a web browser to access the hub at the newly assigned IP address

(https://<IP address entered in section 6.3>:5000)

Once logged in connection to the Turntide Cloud can be verified from the main page.

Note: Your computer must be on the same subnetwork as the hub for connection. If the any of the first three segments of the hub's IP address were changed, you must adjust your computer's IP address to match.

© Turntide Technologies. Confidential. All Rights Reserved.

7. Turntide Stratup Troubleshooting Guide

This guide contains first steps to check to help you through issues starting up and connecting devices to the Turntide Hub. If after checking this guide your issue persists please contact support@turntide.com.

7.1 IP Network Issues

Can't Direct Connect to the Hub

Incorrect Username & Password

If you are able to access the Hub UI login page but unable to login, you may be using the wrong username & password. The Hub UI does not use the same user login as issues for the Turntide web and mobile application. If you do not know the Hub UI login, talk to your Turntide account manager.

Incorrect IP Address

To directly connect to the hub, the IP address on your computer must be on the same IP subnet as the Turntide Hub. At default this is 192.168.1.xxx /24. Check to make sure that you have set a static IP address of 192.168.1.xxx (suggested: 192.168.1.105). These guides will show you how:

- Windows: https://www.hellotech.com/guide/for/how-to-set-static-ip-windows-10
- MAC: https://www.macinstruct.com/node/550

Wrong Web URL

When first shipped Turntide Hub is accessed at its default address from any major web browser by entering the url https://192.168.1.100:5000. You must be directly connected to the hub and have https at the beginning and :5000 at the end. *(Note: If there are two hubs in the Turntide panel the second hub can be reached at https://192.168.1.101:5000)*

If the Hub's IP address has been configured already for the site, the hub can be reached at https://<Hub_IP_Address>:5000 where <Hub_IP_Address> is the IP address configured.

Faulty Physical Connection

To access the Turntide Hub directly the computer you are using must be connected to the Turntide Hub with an ethernet cable. One end must be plugged into your computer and the other end either directly into the IP 1 ethernet port on the Turntide Hub or into a network switch that is also connected to IP1 on the Turntide Hub.

Check that all ethernet cables are properly plugged in and the cables are not faulty.

Testing the Connection

If you can still not reach the Turntide Hub UI, test the connection with a ping. In windows, open the Command Prompt program or on Mac open Terminal. Enter the line:

ping 192.168.1.100

© Turntide Technologies. Confidential. All Rights Reserved.

Note: if the IP address of the hub has been changed enter the Hub's IP as opposed to 192.168.1.100.

If the response line reads host unreachable or Request timeout the connection is not active. If it says 64 bytes from 192.168.1.100 and lists a time=xx.xxx ms then the connection is active. Reopen your web browser, double check the web address and try again

Turntide Hub is Not Connecting to the Turntide Cloud

Internet via Building LAN

IT Firewall

The Turntide Hub requires an outbound connection on several ports to communicate with the Turntide Cloud. If there is no active connection with the Turntide Cloud, confirm with the IT administrator that the below port settings have been configured.

Item	Description	Protocol	Port
Required Egress	Turntide Cloud	MQTT	TCP/8883
Required Egress	Turntide Cloud	SST	TCP/3199
Required Egress	Turntide Cloud	HTTPS	TCP/443
Required Egress	Configurable	DNS	UDP/53
Required Egress	Configurable	NTP	UDP/123
Important Egress	Protocol Specific	HTTP	TCP/80

Incorrect Network Configuration

To communicate on the local LAN network the Turntide Hub must be configured with a correct IP address. This address must be supplied by the IT administrator. Directly connect to the Hub UI and confirm the IP address entered matches what has been specified by the IT administrator. If it does not, update the IP address, Gateway and Subnet information, set DHCP to disabled. Save and restart the hub.

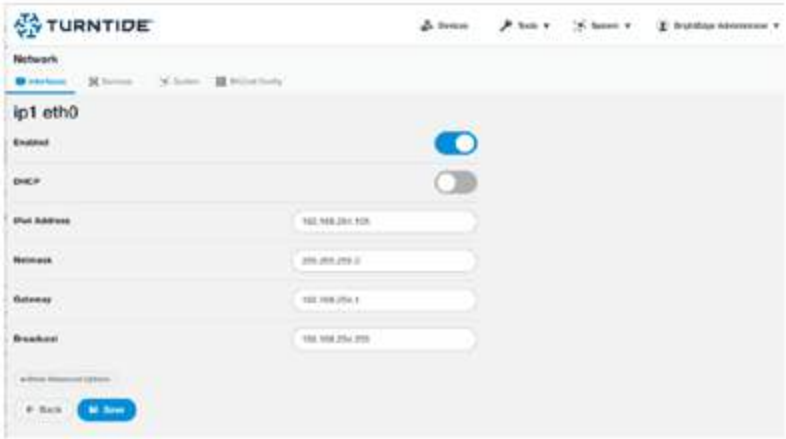

© Turntide Technologies. Confidential. All Rights Reserved.

Faulty Physical Connection

Check to make sure all physical connections are secure and correct

- Ethernet cable connected to IP1 on the Turntide hub or to a switch that is also connected to IP1 on the Hub
- Ethernet is connected to the correct building network switch and port. This can be confirmed with the IT administrator
- All cables are connected and undamaged

Cell Modem

Modem Not Operating

Check the indicator lights on the front of the modem to insure it is powered on and connected. If it is not connected, power the modem on and off.

INDICATOR	BEHAVIOR
	POWER: The IBR200 must be powered by a 4-pin AC adapter. • No Light = Not receiving power. Check the power switch and the power source connection. • Blue = Powered on.
	WiFi BROADCAST: Indicates WiFi activity. • Green = WiFi is on and operating normally. • Amber = Attention. Log into NCM and check the router status.
	EMBEDDED MODEM: Indicates information about the embedded modem • Green = Modem has established an active connection. • Blinking Green = Modem is connecting. • Amber = Modem is not active. • Blinking Amber = Data connection error. No modem connection possible. • Blinking Red = Modem is in the process of resetting.
	SIGNAL STRENGTH: Blue LED bars indicate the active modem's signal strength. • 4 Solid Bars = Strongest Signal. • 1 Blinking Bar = Weakest Signal.

Poor Cell Service

The cell modem must be mounted in a location with good cellular service. If the cell modem displays a weak single strength (1 or 2 bars), try relocating the modem to an area with better cell service. Try using your phone to identify an area with better service.

Changes in the Hub UI not reflected in the Application

Sync the Hub to the Cloud

For changes in the Hub to reflect in the Application the hub must be synced to the Cloud. From the Ops page <app.turntide.com/ops> selected Action —> Reload. Wait a few minutes and then refresh the browser you are viewing the web Application from.

© Turntide Technologies. Confidential. All Rights Reserved.

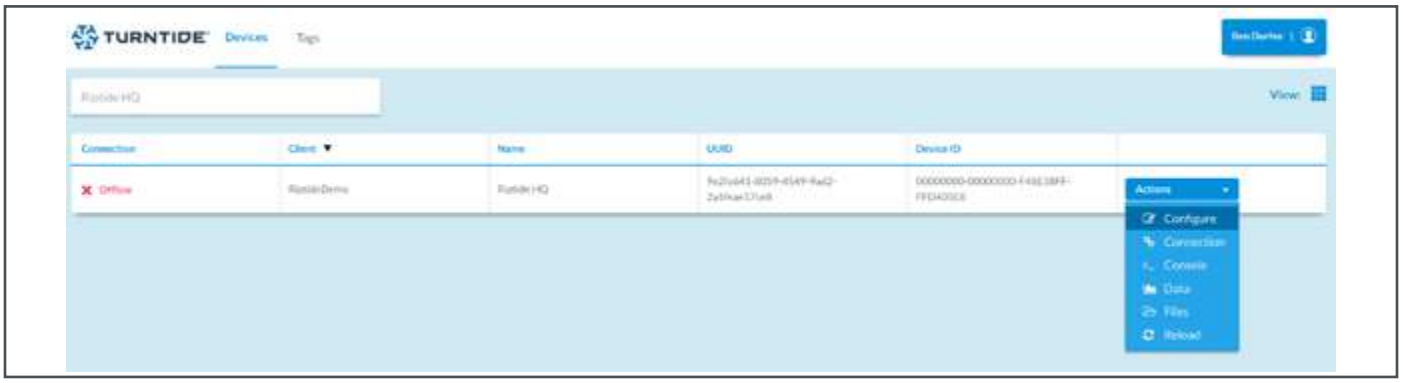

7.2 VRV Discovery Issues

No VRV Devices Discovered

VRV Addressing

Every VRV indoor unit must be assigned a group address and an airnet address at the local controller. Every outdoor unit must be given an airnet address at the unit. Make sure that all devices have been addressed correctly.

VRF Adapter Issue

Check the LED lights on the front of the VRF Adapter.

- Power: No light = No power to the adapter. Check power source to USB expander

  Green = Powered on

- RxTx: No light = No data on DIII-Net bus. Check units are on and active

  Blinking Blue = Data present on DIII-Net bus

- ERR: No light = Normal

  Solid Amber = Power issue or data inconsistency. Check power supply at USB expander

  Blinking Amber = Data collision. Check VRV system wiring

Correct and Active Port

Make sure the port you are using for DNET discovery is active. In the Hub UI check in Network —> Interface. Active ports are denoted with a green circle. Turntide VRF Adapters will be connected to USB ports, generally usb1.1 - usb1.7, corresponding to ports 1-7 on the USB expander. If the port is not green and the VRF Adapter is powered, make sure the USB connection between the Hub, USB Expander and VRF Adapter are secure.

© Turntide Technologies. Confidential. All Rights Reserved.

Only Some VRV Devices Discovered

Discovery Timeout Too Short

If not all the VRV devices on a network are found while running discovery, the Timeout in Seconds may have been too low, especially on larger VRV networks. Adjust the timeout length up and rerun discovery.

VRV Device not Connected

If the same devices are not appearing on repeated attempts to discover them, check the physical VRV unit. Ensure the VRV device is powered and the F1F2 network cables are well terminated.

7.3 BACnet Discovery Issues

BACnet MSTP Devices Discovered

Inconsistent Baud Rate Settings

Every BACnet device on the same MSTP network must be communicating at the same baud rate (speed). A common default baud is 38.4k but this is usually configurable at the device. The Baud rate for the Turntide Hub

© Turntide Technologies. Confidential. All Rights Reserved.

can be configured individually for each serial bus port under its configurations in Network —> Interfaces (com1 - com4).

Check all devices and make sure they have the same configured baud rate.

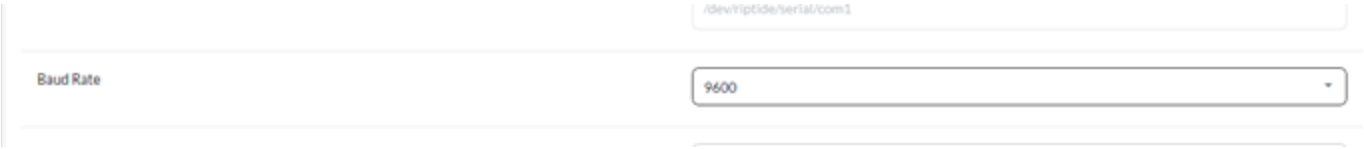

Duplicate MAC Addresses

Each BACnet MSTP device must be configured with a unique MAC address at the device. If several devices are missing from discovery, it's possible multiple devices have been programmed with the same MAC address. Check the user guide for the BACnet device and assign it a unique MAC between 1 and 126.

The Turntide Hub is generally configured with a MAC of 0 or 127.

Max Master Setting
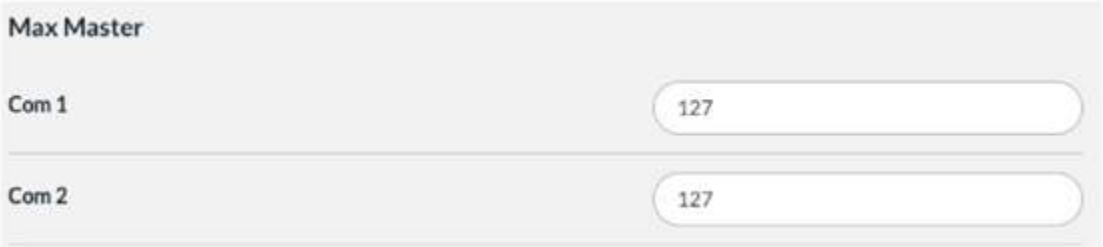
The Max Master setting can be found in the Hub UI under Network —>BACnet Config. This is set to 127 by default to allow communication to all devices.